M12 Camera Lens Module

For >1.2µm Pixel ~12MP Sensor



Key Properties

Image Diameter 1/2.3":Φ7.7mm, 1/2.5":Φ7.2mm

Resolution: >1.2µm (~12MP) or pixel size > 1.2µm Sensor

Focal Length:
1.9mm/2.7mm/3.25mm/3.9mm/4.3mm/8.0mm/14mm/21mm

Lens Mount for M12 x 0.5P
IR Cut Filter Built in, Others Optical Filter Optional



Application

Camera Module / AOI Inspection / High-End Security
Aerial Photography / PTZ Tracking / Drones

Feature

- Different view angle option and glass-plastic lens material with good reliability.
- Image diameter Φ7.7mm for 1/2.3",Φ7.2mm for 1/2.5" smaller dimension size sensors.
  - Pixel size resolution: >1.2µm pixel or bigger pixel size sensors can be suitable.
  - The sensor pixel resolution suitable around 12MP or below sensors.
- M12 x 0.5P is convenient for standard S-Mount M12 holder.
- IR cut filter built-in to cut the infrared light for the outdoor environment.
  - The other optical filters optional as your requirement like IR pass filter for IR sensing system or special wavelength band customized.

Introduction

CL12MP1.2 series is a Glass + Plastic elements lens designed for image circle Φ6.4~8.3mm sensor size suitable to 1/2.3", 1/2.5" or smaller size image sensors. The optical design resolution for >1.2µm pixel size, it can match to 12MP or below resolution also can be used for bigger pixel size sensors. The wide view angle range from 25 degree to 150 degree FOV options for M12 standard S-Mount holder is convenient to find the suitable lens you need.

The M12 designed convenient for the standard S-Mount holder of camera module. CL12MP1.2 camera lenses are the most cost effective and good choice for high-end security, drones, PTZ Tracking, aerial photography etc. applications.

Specifications

Lens Mount Type		M12 x P0.5
Dimension(mm)		Φ14-23.5 x TTL
Element		G+P Lens
Image Circle(mm)		Φ6.4~Φ8.3mm
For Sensor Size		1/2.3", 1/2.5"
Focal Length (EFL)		±3%
Back Focal Length (BFL)		±3%
F/No. (Infinite)		as the Table.1
Field of View (FOV)	D	as the Table.1
	H	as the Table.1
	V	as the Table.1
Optical Distortion		as the Table.1
Resolution		>1.2µm ~12MP
Chief Ray Angle (CRA)		<7.97-21
IR Filter Spec. (Others available)		
Tavg≧88% @440nm-620nm, T=50% @650nm Tavg≦3% @700nm-1000nm, T<5% @1050nm		
Working Temperature		-20℃~+70℃

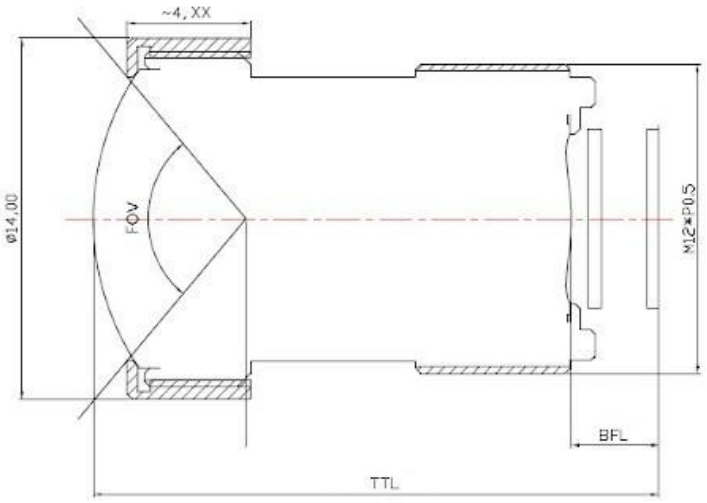

Table.1

FL	F/no.	Image Circle	TTL	Dist.	FOV (Image Circle)
1.9mm	1.8	6.4mm	27.66mm	<-20%	D185/H185/V185
2.7mm	2.8	8.3mm	22.50mm	<-1.5%	D113/H100/V82
3.25mm	2.6	8.3mm	22.50mm	<-0.6%	D101/H88/V70
3.9mm	2.8	8.0mm	22.15mm	<0.5%	D90/H77/V61
4.3mm	2.8	8.1mm	22.00mm	<0.58%	D82/H72/V56
8.0mm	1.8	7.1mm	33.90mm	<-15.68%	D50/H44/V32
14.0mm	2.8	8.1mm	20.53mm	<-0.5%	D30/H25/V18
21.0mm	2.8	9.3mm	28.22mm	<0.08%	D25/H19/V14

Specifications are subject to change without notice.

RoHS